Packaging Specifications — Dimensions in mm.

TO-92

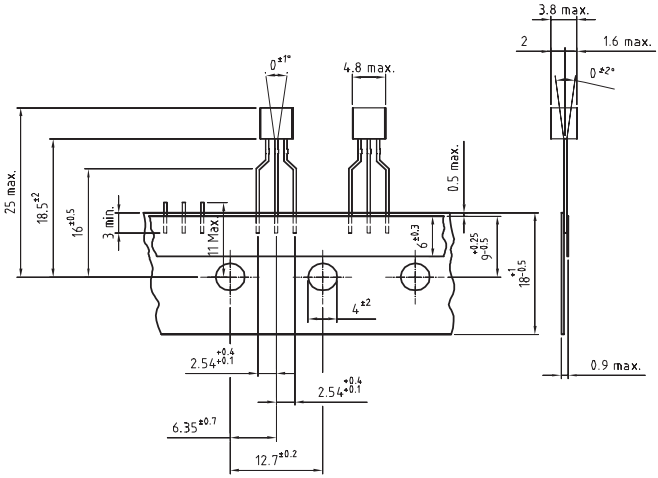

AMP BOX PACKAGING
No. of Devices 2.000

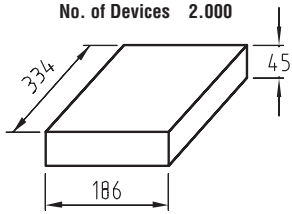

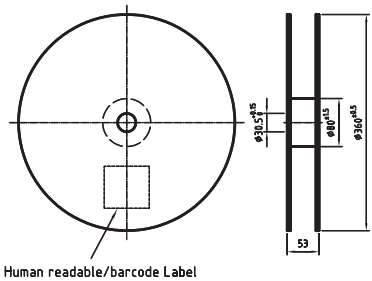

TR BOX PACKAGING
No. of Devices 2.000

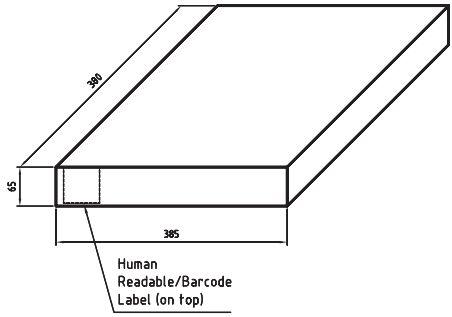

BULK BOX PACKAGING
No. of Devices 2.500

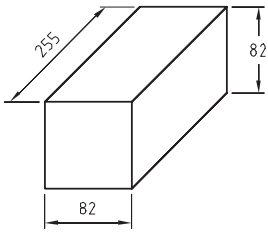
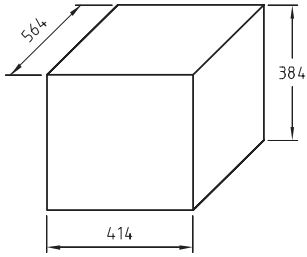
BULK MASTER BOX