Package Outlines

IN LINE 7M1

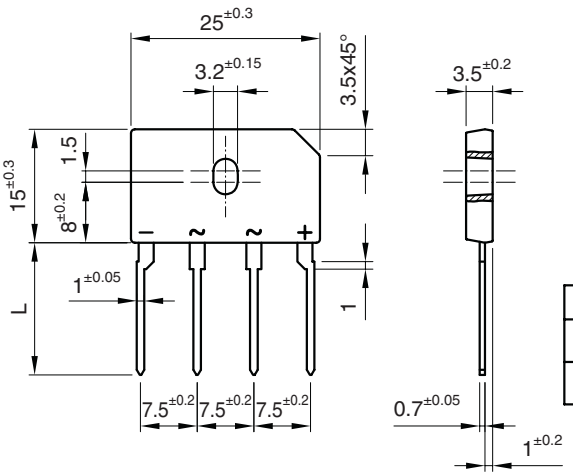

L	Suffix
17.5±0.5	
8±0.5	-4

Dimensions in mm